mounting systems

E-Port Vario S1
Installation manual

EN

Content

1. Introduction

1.1 Brief Description

The innovative E-Port Vario S1 is a solar carport for commercial use. It maximises energy gain and offers high flexibility through efficient use of parking space thanks to its robust steel construction with durable corrosion protection. Functionality and appearance go hand in hand. The sleek and aesthetic design not only offers a variety of powder-coated colours, but also extra drainage for each individual segment.

All components are designed to be very easy to assemble. The components used are made of aluminium and stainless steel. Their high corrosion resistance guarantees a maximum service life and offers the possibility of complete recycling.

1.2 About the Guide

Subject
These instructions describe the installation of the E-Port Vario S1 as well as all system-specific information on planning, components and safety instructions. The drawings in the first part of the instructions show the installation with corner clamping of framed modules.

Applicable documents
In addition to this document, the document „General Assembly Instructions" can be found on the website (www.mounting-systems.com). This document describes the information on standardisation, safety, transport, maintenance, dismantling and disposal that is generally valid for Mounting Systems assembly racks. Both these assembly instructions and the „General Assembly Instructions" are an integral part of the assembly system and must be followed for every installation.

It is essential that you read these assembly instructions and all other applicable documents before carrying out assembly, maintenance and disassembly work. You will be given all the information you need for safe and complete assembly, maintenance and disassembly.
If you have any questions, please contact Mounting Systems GmbH.

User Group
These installation instructions are intended for the following persons (user group):

- Skilled personnel
- Instructed personnel

Skilled Personnel
Skilled personnel are people who are able to execute installation, maintenance and disassembly work properly on the basis of their professional training.

Instructed Personnel
Instructed personnel are persons who have been instructed and taught appropriately regarding the assigned tasks and the possible risks in the event of improper conduct. An instructed person must have received instructions regarding the required safety devices, precautions, relevant regulations, accident prevention regulations as well as operating conditions and must have demonstrated their competence. The implemented work must be inspected and accepted by skilled personnel.

Guidance Notes
The following guidance notes enhance the orientation when handling this installation manual:

Pictograms:

This symbol indicates important information and useful tips.

This Symbol indicates ways and means to make the installation process easier

1.3 Warnings

The following warnings are used in these Installation Instructions to indicate safety-related information. They include:

- Warning symbols (pictograms)
- Signal words that identify the hazard level
- Information about the type and source of the hazard
- Consequences of ignoring the hazard
- Measures for the prevention of hazards and the prevention of injuries or damage to property

The signal words of the warnings respectively indicate one of the following hazard levels:

Danger!
Indicates a major exceptional danger which, if not avoided, will result in serious injury or death.

Warning!
Indicates a potentially dangerous situation that may lead to serious or medium bodily injury and property damage.

Caution!
Indicates a potentially hazardous situation which, if not avoided, may result in minor or moderate injury and property damage.

Attention!
Indicates a potential hazard that can lead to property damage.

1.4 Safety

All universally valid safety instructions for framework systems of Mounting Systems GmbH are listed in the document "Installation manual – general part". Please read this document carefully and observe the instructions given therein: Please only use the product according to its foreseen purpose, comply with the obligations of the owner and observe all general and specific safety instructions.

In addition, during all activities that you execute, please observe the specific safety instructions given in this specific installation manual.
The specific safety instructions are positioned in each case directly before the respective installation step.

1.5 Tools

In order for You to be able to install the system in a safe and efficient manner, it is important to precisely follow the following suggestions. Our manuals offer valuable information concerning the proper use of tools, as well as practical tips. Please consider, that the careful handling of tools constitutes the foundation of successful installation.

According to this installation guide, you need the following special tools in order to simplify assembly:

- Tape measure
- Chalk line
- Torque wrench with size 5, Allen socket
- Helmet
- Gloves
- Forklift
- At least five people

2. Technical Description

2.1 Product Overview

Below are the most important parts of the system:

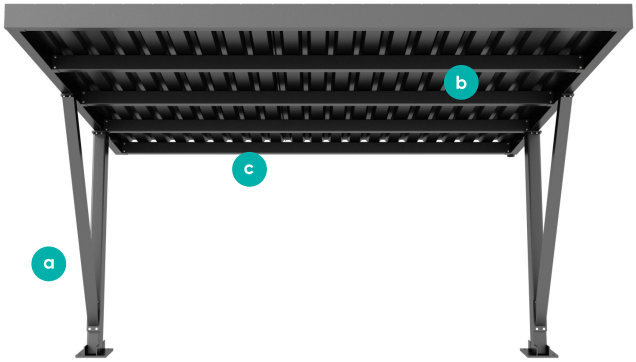

E-Port Vario S1 Components:

a Support
b Trapezoidal sheet
c Roof Gutter

Component Weight

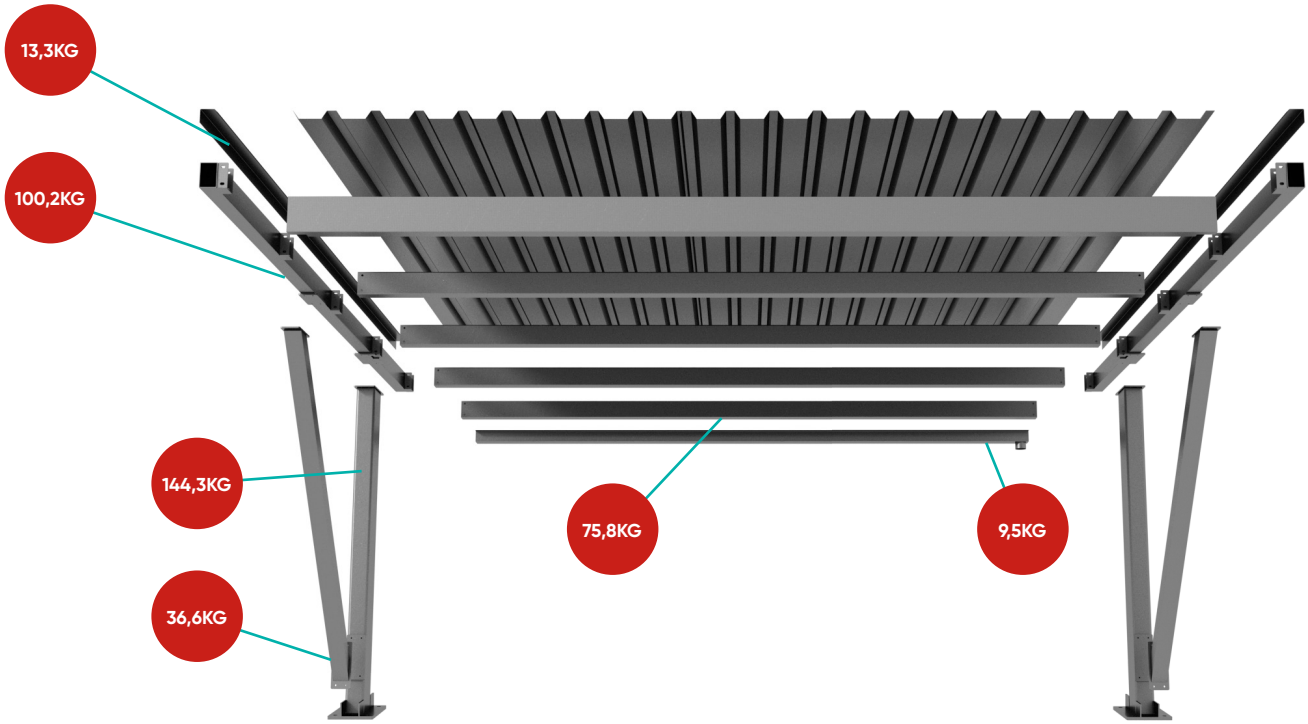

2.2 Components

All system parts of the E-Port Vario S1 that may be included in the scope of delivery are shown below. The exact scope of delivery and the number of individual system parts depend on your order.

1. 3x Support 0DW110-000
2. 3x Strut 0DW120-000
3. 1x Rafter left 0DW140-000
4. 1x Rafter middle 0DW150-000
5. 1x Rafter right 0DW160-000
6. 10x Crossbeam 0DD100-001
7. 2x Rain gutter 1DD100-001
8. 1x Front cover bar 1DD100-006
9. 1x Front cover bar 1DD100-007
10. 2x Cover bars sides 1DD100-004 2x
11. 10x Trapezoidal sheet TR3 5_207-6000
12. 12x Fixed anchor W-FAZ/S M24-30/190 0904522401
13. 272x Drilling screws JT2-6-5,5x22
14. 40x Hexagon head screws M12x130 ISO 4014
15. 36x Hexagon head screws M12x35 ISO 4017
16. 40x Hexagon nut M12 ISO 4032
17. 76x Washers ST12 ISO 7090

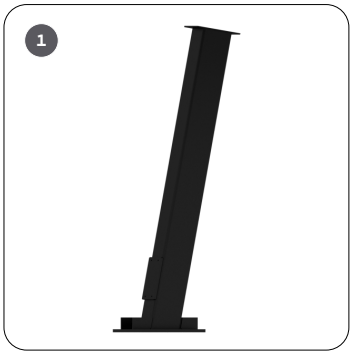

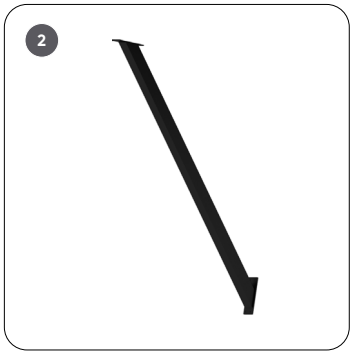

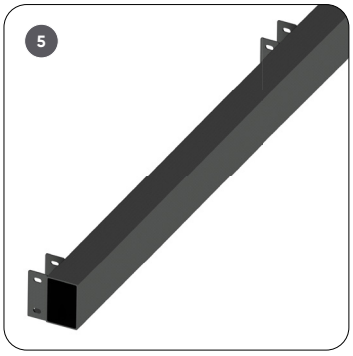

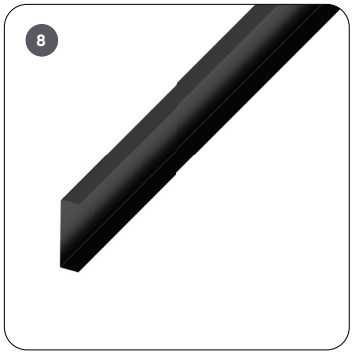

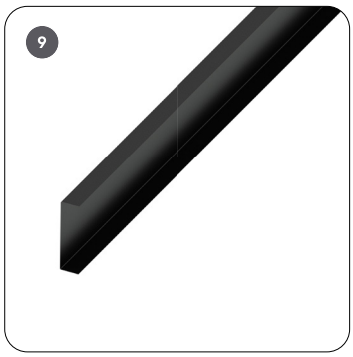
9

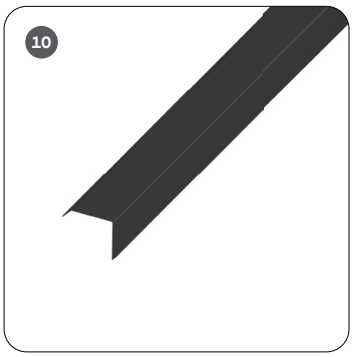
10


11


12


13


14


15


16

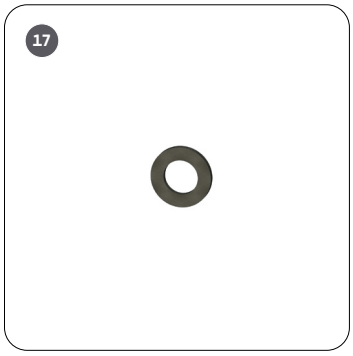
17

3. Important Assembly Instructions

3.1 Operating Instructions

- No shadow
- Free, unobstructed assembly area
- Suitable ground

3.2 Assembly Preparation

Make yourself familiar in particular with:

- The preparation of the foundations

3.3 To the assembly descriptions

In the following chapters, all steps for planning and installing the E-Port Vario S1 are listed in the correct order. Chapters 4 to 8 describe the assembly steps for carport construction, while chapters 9, 10 and 11 describe the design of the modules.

Follow the installation steps listed and be sure to observe the safety instructions.

Danger!
Danger to life due to roof damage!

Excessive load can severely damage the roof!

Before mounting and installation, make sure that the building and in particular the roof cladding meet the increased structural requirements due to the PV system as well as the mounting operation

Danger!
Danger to life due to falling parts!

Parts falling from the roof can lead to serious injuries or death!

Before any assembly and installation, make sure that the material used meets the static requirements on site

Please check the screw connections

4. Foot Posture Planning

Measure the position of the foot plates and fix them at the position you have defined with the impact anchors provided in the previously prepared foundations.

Attention!
Pay attention to the alignment of the foot plates so that the supports can be attached to them later.

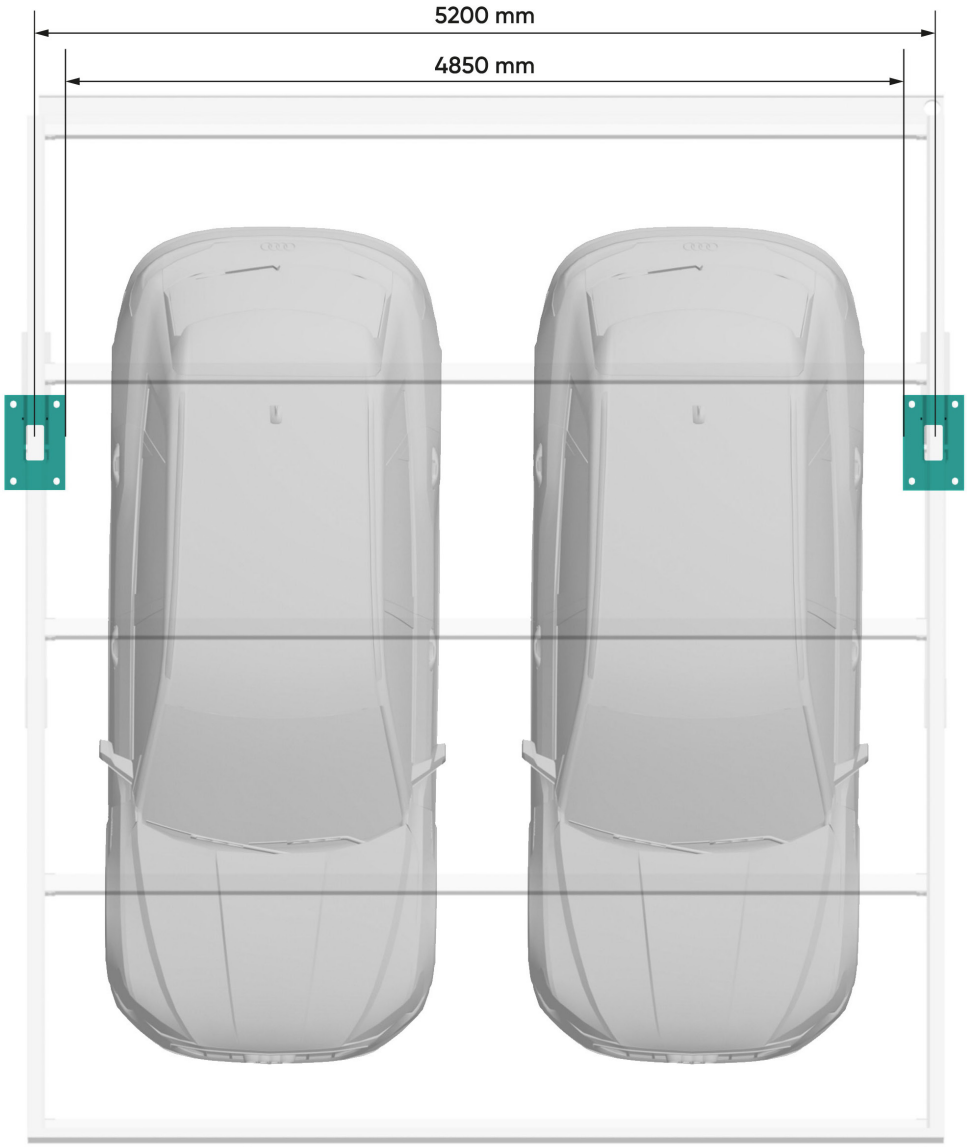

Installation Steps:
Secure the 2 foot plates to the concrete foundation with the aid of 4 anchors (12) to the concrete foundation.

Tightening torques:
1. Fixed anchor 0904522401 / 160 - 200 Nm

5. Mounting the Side Elements

Please do not damage the surface when opening the packaging. The surfaces are galvanised, „electrolytically galvanised“ and powder-coated.

Assembly steps:

- Wrap a strap around the support (left) below the connecting plate. Lift the support out of the transport pallet and lay it lengthwise on the floor.

- Note: Place damping plates on the floor to avoid impact.

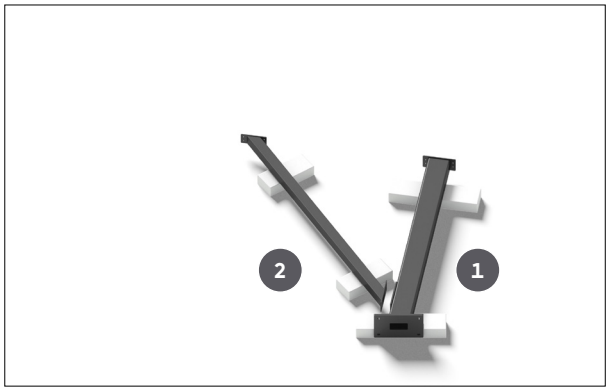

- Place the strut and rafter next to the support in the direction of assembly.

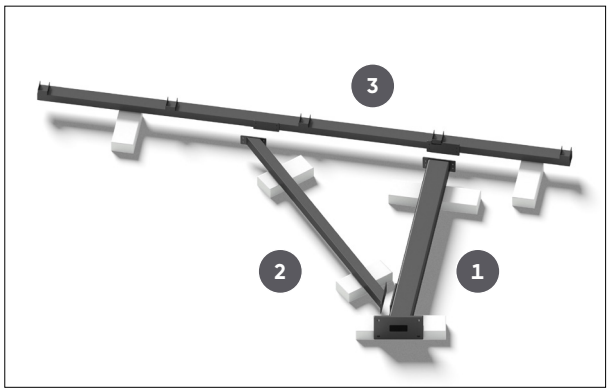

Danger!
Danger to life due to falling parts!

Parts falling from the roof can lead to serious injuries or death!

Falling objects when raising the side panels can cause serious injury and damage

- Place the connecting surfaces of the support and strut on top of each other and their holes concentrically opposite each other.

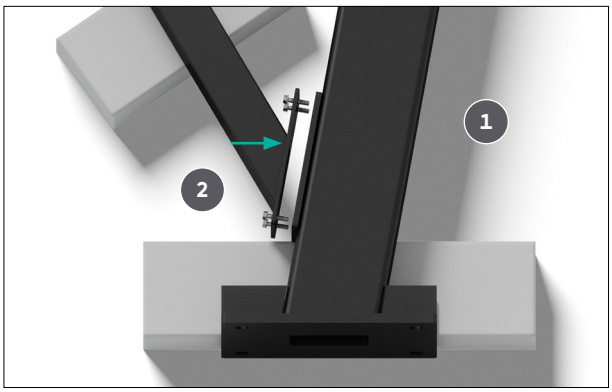

- Mount the support and strut together with 4 x M12x35 incl. washer and nut.
- Note: Fit the screws diagonally.

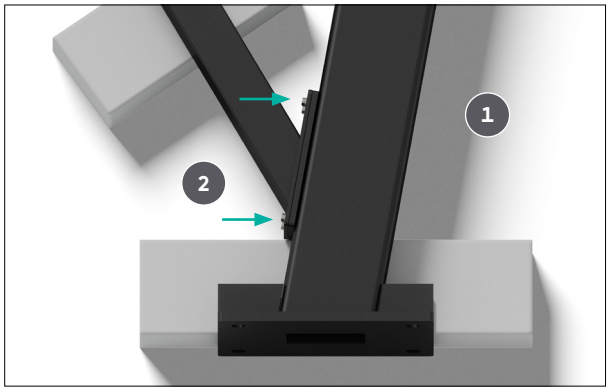

- Place the connecting surfaces of the support or strut and rafter on top of each other and their holes concentrically opposite each other.

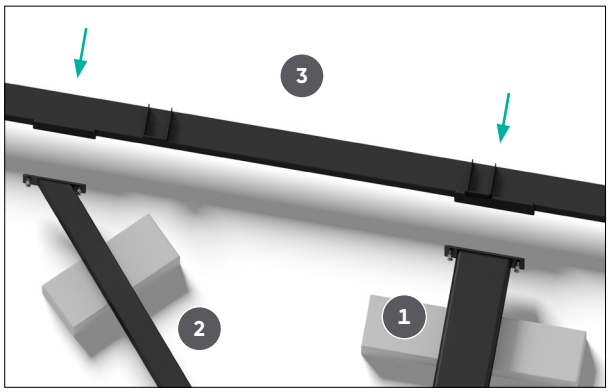

- Mount the support, strut and rafter with 8 x M12x35 incl. washers.
- Mount the support, strut and rafter for the second side in the same way.
- Note: Mount the screws diagonally.
  When setting up the E-Port Vario S1 for more than two vehicles, centre 0DW150-000 rafters must be mounted with U-profiles on both sides in the direction of the extension.

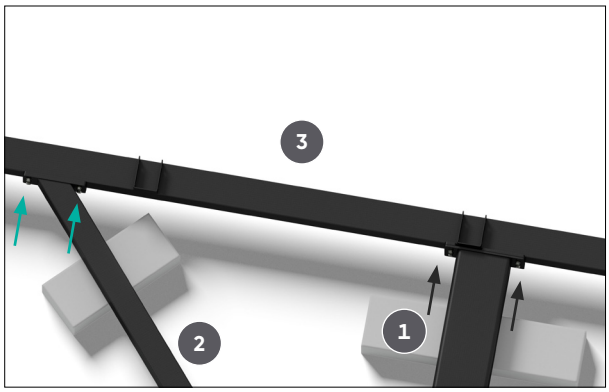

Raising the side panels

- Fasten the belt to the centre of gravity of the rafter and raise it with a forklift.

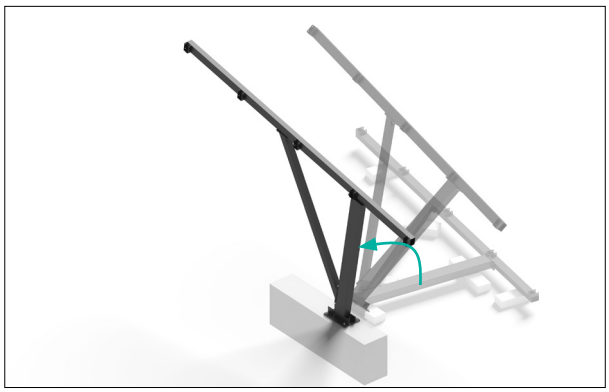

- Place it slowly on the foundation and mount with 4 x fixed anchors.

- Repeat the same process on the second side.

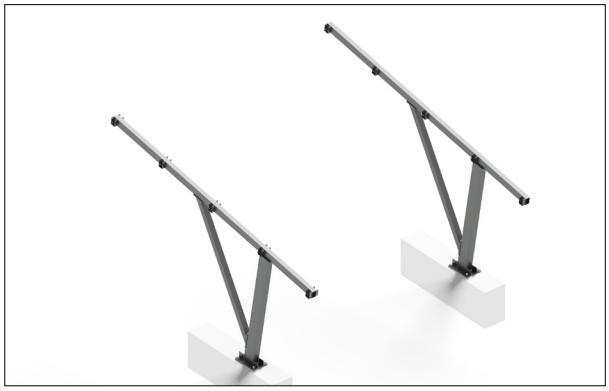

6. Assembly of the upper construction

6.1 Fastening the crossbeams

- Place the cross beams lengthwise on a fork-lift and raise them vertically. Position the cross beam over the U-profiles of the rafters.

- Slowly lower the fork and carefully place the cross member parallel into the U-profiles.

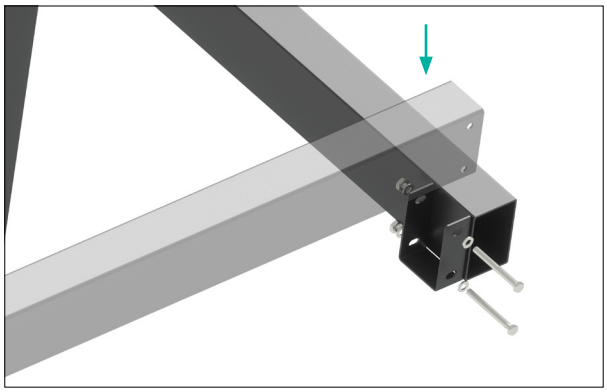

- Centre the holes of the cross member (6) on the slotted holes of the U-profiles of the rafter (3).

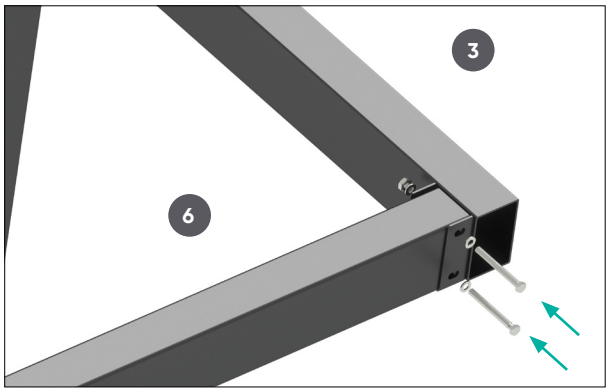

- Assemble cross member (6) and U-profiles together with 4 x M12x35 incl. washer and nut.

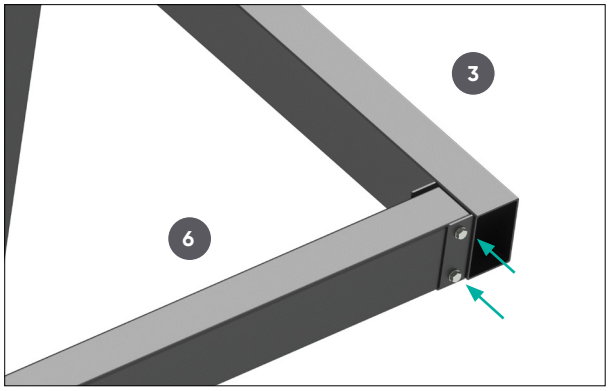

- Carry out the same process for the remaining rafters.
- Note: See sketch below for the order.

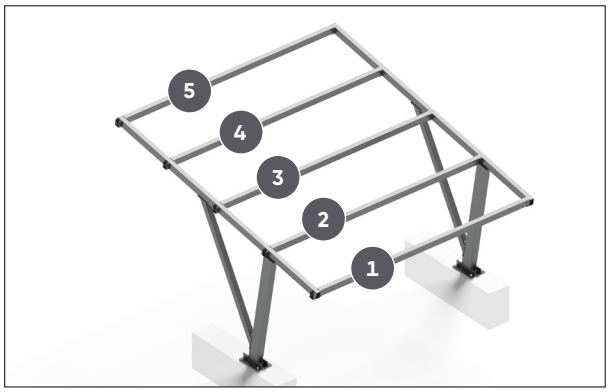

- Fix the rain gutter at the rear end of the carport with fixing screws.

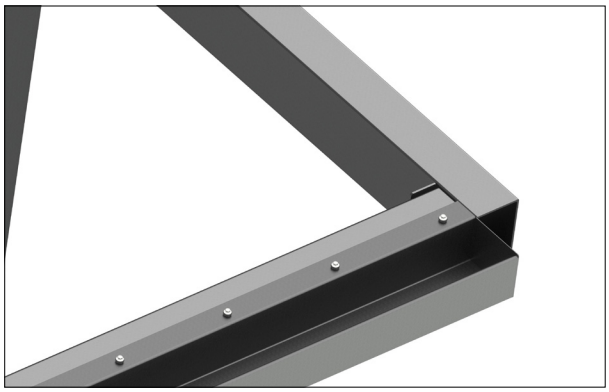

Set-up of the E-Port Vario S1 L-Form for two additional vehicles.

- Assembly and installation of the extension side in the same way as in chapter 5 (p. 10).

- Assembly of the superstructure in the same way as Chapter 6.

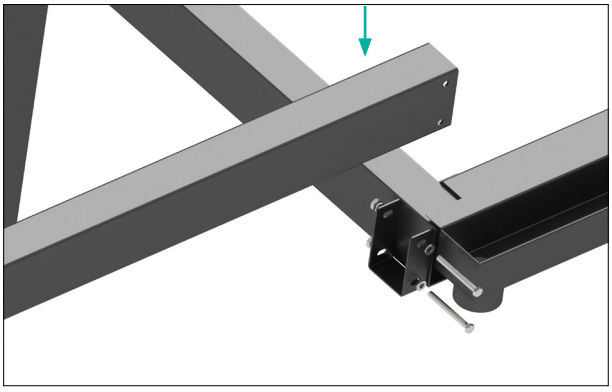

- Mounting the cross members on the end side.

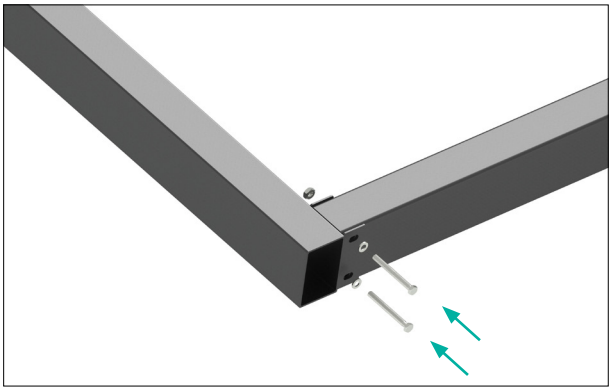

- Mounting the rain gutter.

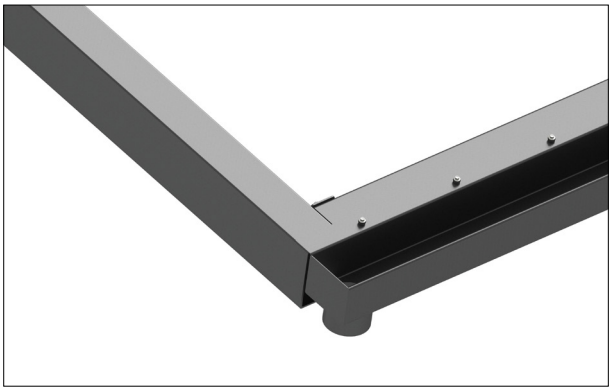

7. Trapezoidal sheet mounting

Place the trapezoidal sheet (11) precisely at the edges of the rafter (3) and the crossbeam (6). Put the trapezoidal sheet on the carport. The front side must be flush with the front face of the front cross beam. The outer side of the trapeze must be flush with the outer side of the rafter. Finally it must be fixed from above to the cross beam using self-tapping screws.

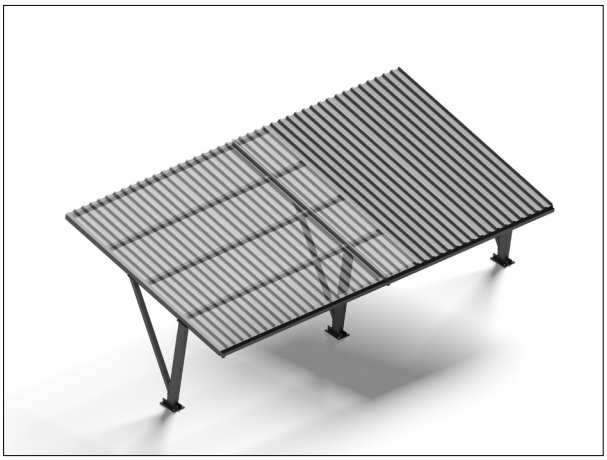

The beginning of the new trapezoidal sheet is laid overlapping on the end of the previous trapezoidal sheet.

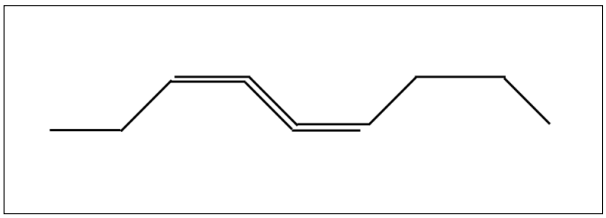

Fill the carport roof without gaps with trapezoidal sheeting. Fasten the trapezoidal sheets in the high beads with the JT2-6-5.5x22 drilling screws (13).

Drilling screw JT2-6-5,5x22 -
Screw-in speed max. 1800 rpm

The area that can be covered depends on the PV modules used and the mounting direction.

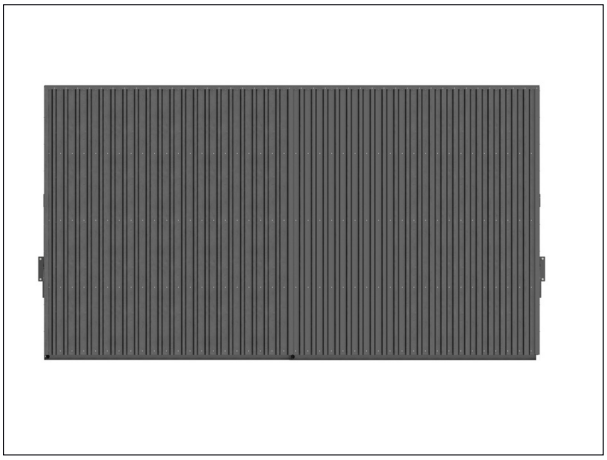

Attention!
Note the thermal separation of the PV modules every 12 metres.

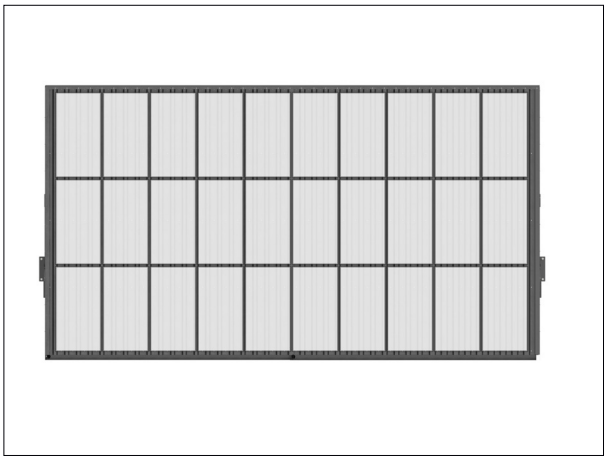

Danger!
When laying the trapezoidal sheet, pay attention to the prevailing wind direction!

Be sure to remove all produced chips after drilling to void corrosion.

E-Port Vario S1 Max. usable area approx. 58.00 m²

7.1 Fastening the Cover Panels

Assembly Steps:
Fastening the side panels

- Put the side shield over the trapezoid, so that the front side lies flat across the front face of the front cross beam. Fix the side shield on the side to the rafters with self-tapping fixing screws. Do the same on the opposite side.

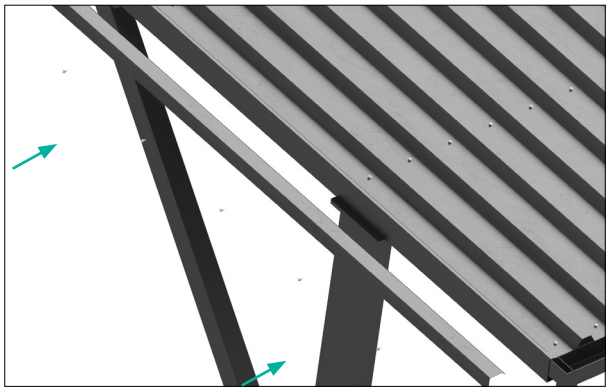

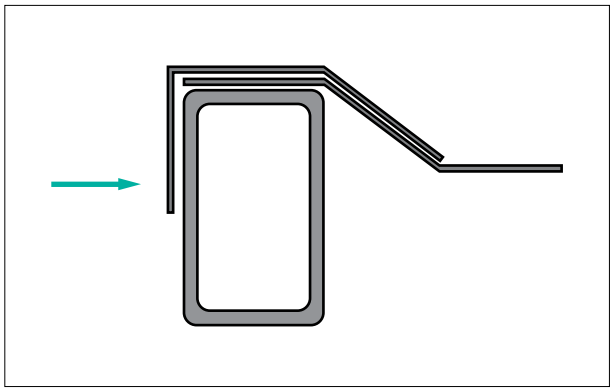

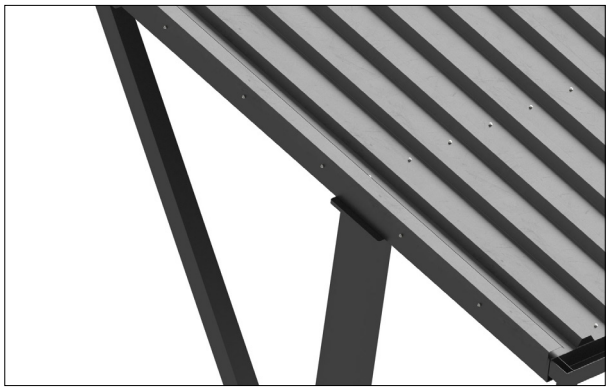

Fastening the front panels

- Clamp the trapezoidal sheet and the cross beam with the front panel. Lay the outside of the front panel aligned with the rafter. Fasten the front panel from above to the high beads of the trapezoidal sheets with self-tapping self-drilling screws.

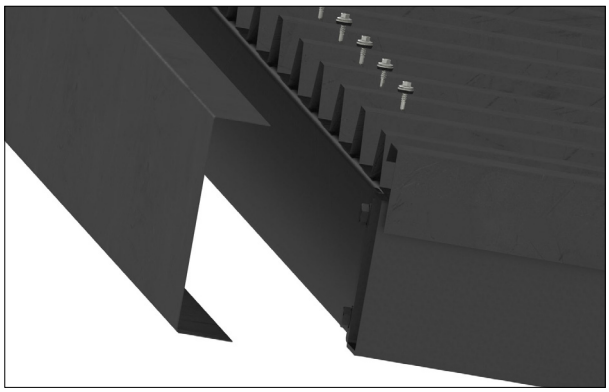

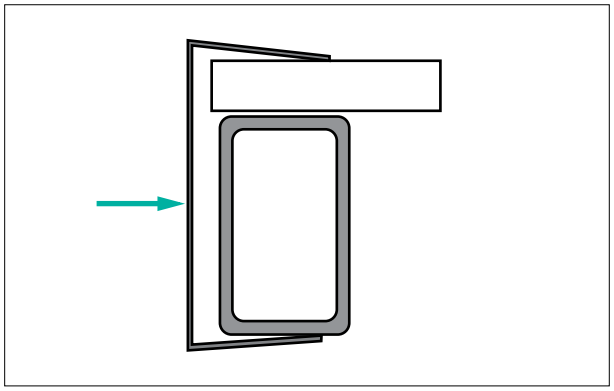

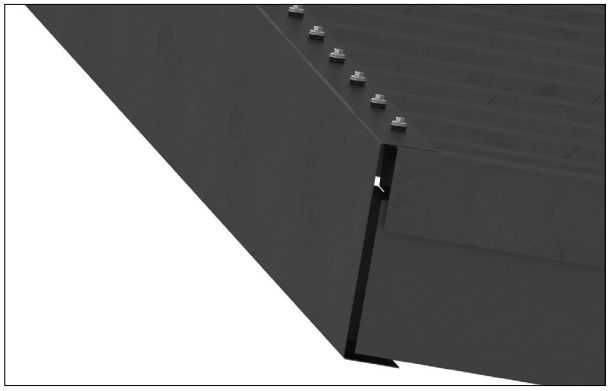

8. Planning the Module Area for a Landscape Module Installation

For a landscape installation, short rail sections (Rail 1/15, 1/16 and 4/40) with a length of 130 mm are installed. The distances are determined by the dimensions of the modules to be installed as well as the vertical beading distance. The clamping points specified by the manufacturer must be observed. The distance between the profile rails is calculated as follows:

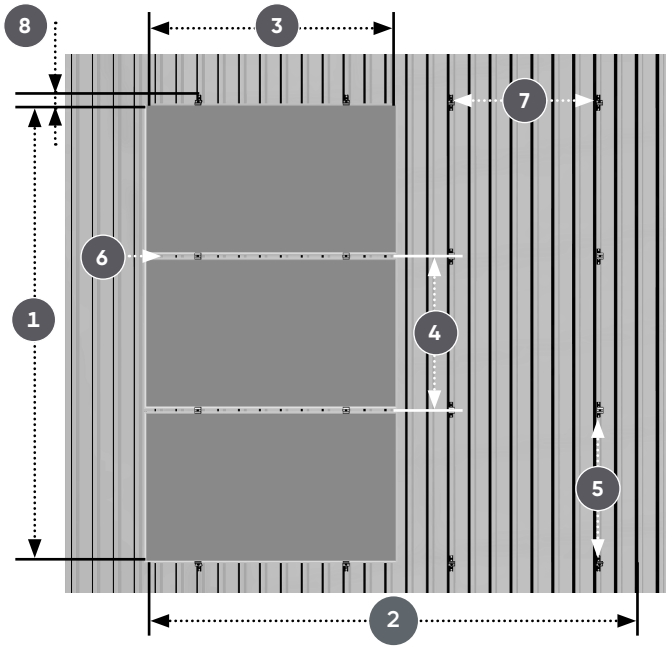

Danger!
Danger to life due to damage to the roof!

Excessive load weights can severely damage the roof!

Before mounting and installation, make sure that the building and especially the roof cladding meet the increased structural requirements due to the PV system as well as the mounting operation.

1. Height of the module field:
   nMV x (MW + 19 mm) + 2 x 41 mm - 19 mm
2. Width of the module field:
   nMH x MN + (Total gap dimension, if needed)

   nMV Number of modules vertical
   nMH Number of modules horizontal
3. Module length (MN)
4. Module width (MW)
5. Vertical distance between two rail sections: Module width - 82 mm (clearance between rail sections, tolerance +/-1 mm)
6. Space between the modules = 17-19 mm
7. Horizontal distance between the rail sections of a module column: approx. ½ x module length, depending on the beading grid (the rail sections must be positioned on the high beads)
8. 41 mm overlap of the rail for fastening the end clamps

Danger!
Danger to life due to falling parts!

Parts falling from the roof can lead to serious injuries or death!

Before any assembly and installation, make sure that the material used meets the static requirements on site.

Design according to local conditions in accordance with Eurocode 1-DIN EN 1991-1-1/ Eurocode 9-DIN EN 1999-1-1 required

9. Planning the Profile Rails for a Landscape Installation

For a landscape installation, install 130 mm rail components (Rail 1/15, 1/16 and 4/40). EPDM insulation bands are already in place. They do not have to be embedded again. The rails are fixed directly to the sheet
metal crests using two thin sheet screws.

The following mounting steps are similar for the following rail types:

- **Trapeze ProLine Rail 15/16 mm high:**

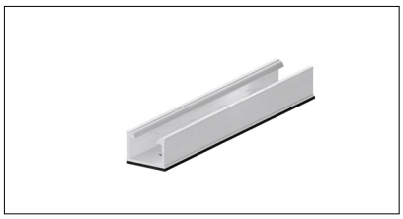

- **Trapeze ProLine Rail 40 mm high:**

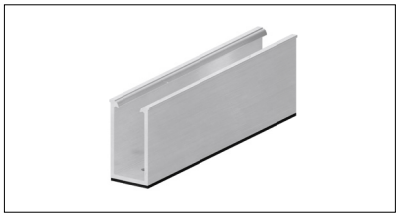

Danger!
Risk of death due to falling components!

Components falling from the roof may cause severe injury or death!

Before starting the installation, secure the perimeter so that nobody is injured due to falling components

Make sure that nothing at all can fall from the roof

Always wear the statutory required PPE

Do not remain in the hazard zone

If the wind is too strong, cease all works

When installation is completed, check whether the frame and modules are properly installed

Danger!
Mortal hazard in case of fall from the roof!

A fall from the roof may cause grave injury or death!

Always wear the required PPE!

Protect yourself from falling

If the wind is too strong, cease all works

Mounting Steps:

- Determine the position of the profile rails on the trapezoidal sheet, taking into account the high bead spacing and the permissible clamping ranges of the PV modules used.
- Mark the position of the short rails on each bead with the help of a chalk line. Make sure that the chalk line runs exactly at a 90° angle to the high beads.
- Start from the bottom with the first row and position the rail pieces exactly parallel to the beads on the high beads.
- Fasten the profile rail pieces in the trapezoidal screws in the trapezoidal sheet metal.
- Mount the other rows of rail sections in the same way. Make sure that the correct vertical distances between the rail sections are maintained.

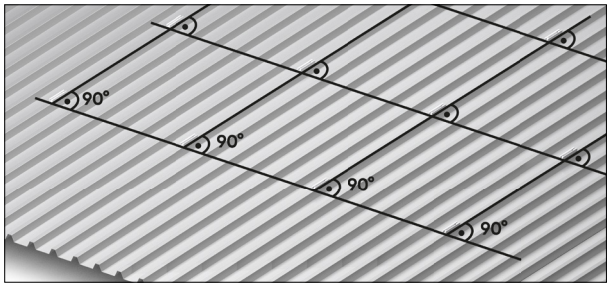

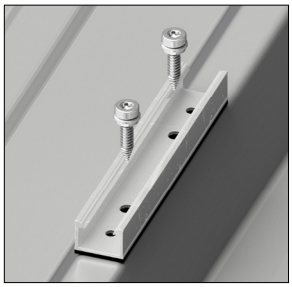

Danger!
Material damage due to incorrect assembly.

Incorrectly mounted thin sheet metal screws can tear out.

Thin sheet screws must be tightened very well, yet not overtightened.

10. Mounting Modules in Landscape orientation

The modules are mounted one after the other on the profile rails. Mounting Systems GmbH recommends mounting the modules in columns from the bottom to the top. Module holders and module end holders are used to fix the modules. The module end holders can each hold one module. The module holders are positioned between two modules.

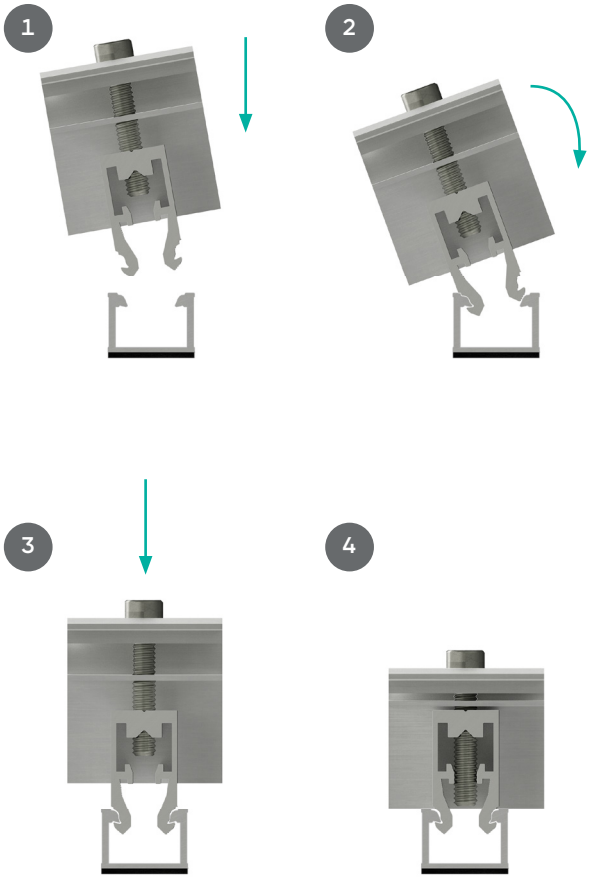

10.1 Fixing the Clickstones

Clickstones are used when mounting the modules. The Clickstone is a special clip with which the module holders are fixed in the profile rail. For the assembly you only need an Allen key (5 mm). You can insert the Clickstone from above the rail channel of the profile rail.

Mounting Steps:

- Insert the Clickstone into the rail channel at a slight angle.
- Press the Clickstone down.
  A click will be heard once it is fixed in place.
- Tighten the Allen key with a torque of 8 Nm.

Note!
The shape of the Clickstone matches the profile of the rail channel exactly. It is deliberately designed to be heavy in order to prevent unintentional slipping. To move the Clickstone, press lightly on the screw from above and move the Clickstone in the rail channel with a little pressure.

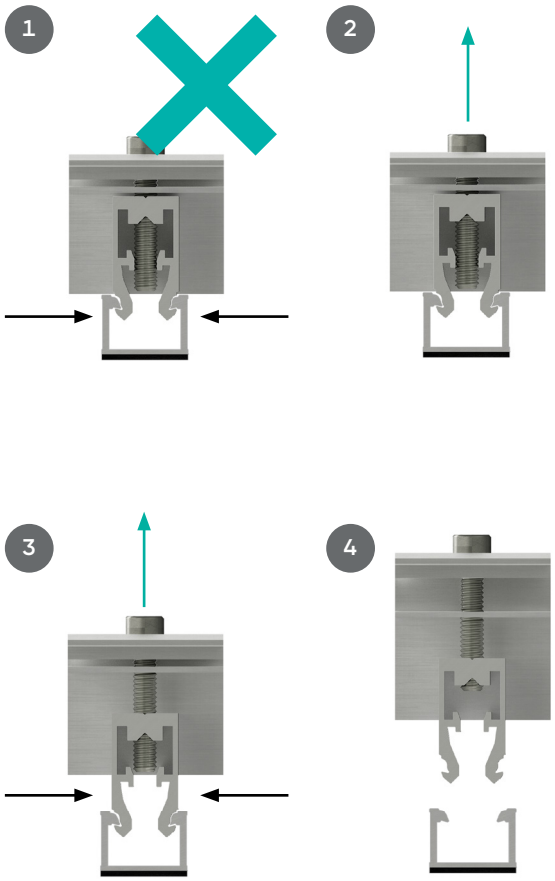

Attention!
Material damage due to deformed Clickstones.

When using clearly deformed Clickstones, there is no secure module fastening. PV modules can fall down and be damaged.

Only use Clickstones whose noses are parallel to each other and audibly snap into the rail channel. Replace deformed Clickstones before installation.

Attention!
Material damage due to incorrect assembly.

Incorrectly mounted Clickstones can tear out. PV modules can fall down and be damaged.

Mount all Clickstone connections according to the instructions.

Note!
The lugs on the inside of the Clickstone are designed to mechanically prevent it from clicking out when the screw is tightened. Accordingly, the screw must first be unscrewed to above the lugs before the Clickstone can be removed from the base rail again by pressing it together and lifting it.

10.2 Fixing the Modules From the Outside

The edge modules of the PV system (in the case of landscape installation, the upper and lower module rows) are fastened on the outside with two module end clamps each.

Mounting Steps:

- Insert the Clickstone of the end module holder centrally into the rail channel of the profile rail.
- Place and align the module.
- Push the module end holder all the way up to the module frame.
- Tighten the screw (tightening torque 8 Nm) and thus clamp the module.

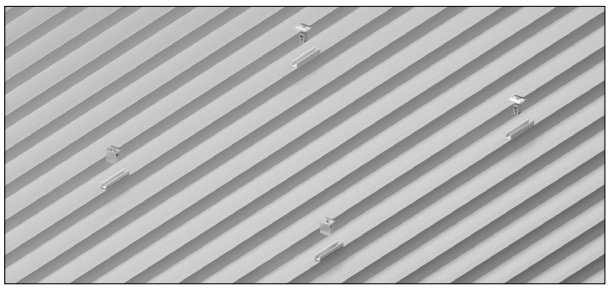

Correct fit of the module end bracket: It only fits between the centre of the thin sheet metal screws!

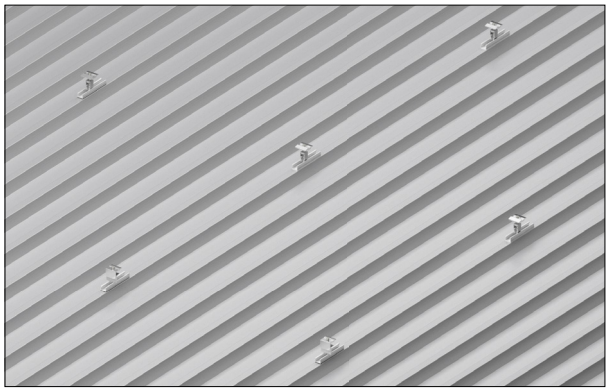

Attention!
Damage to material due to incorrect installation.

Incorrectly fastened modules can fall down and be damaged.

Make sure that the Clickstone locks into place correctly. Push the module all the way to the module end holder. Observe the prescribed tightening torque when tightening the screw. After mounting, check that the module is firmly seated.

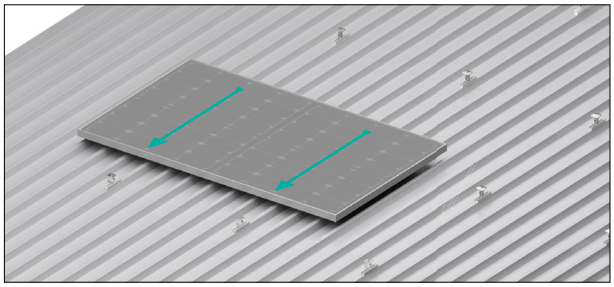

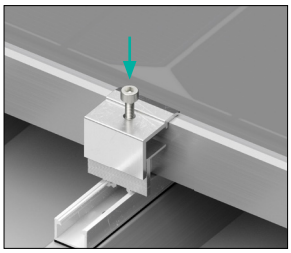

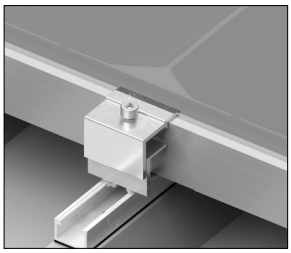

Attention!
Damage to material due to incorrect installation.

Overloaded thin sheet metal screws can tear out.

Make sure that the module end holder is positioned correctly. It is essential that the Clickstone is positioned between the two thin sheet metal screws of the rail element.

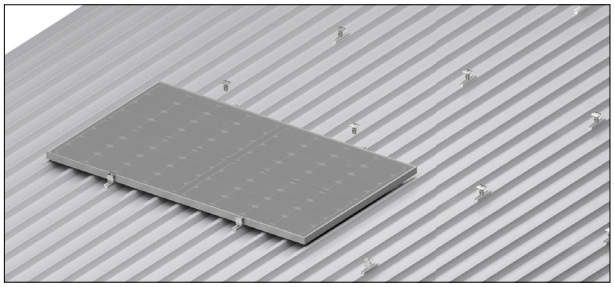

10.3 Fixing the Modules From the Inside

Two module holders are fixed between each two modules.

Assembly Steps:

- Insert the Clickstone of the module holder into the rail channel of the profile rail.
- Push the module holder all the way up to the frame of the already mounted module.
- Push the second module onto the module holder and align it.
- Tighten the screw (tightening torque 8 Nm) and thus clamp the modules in place.

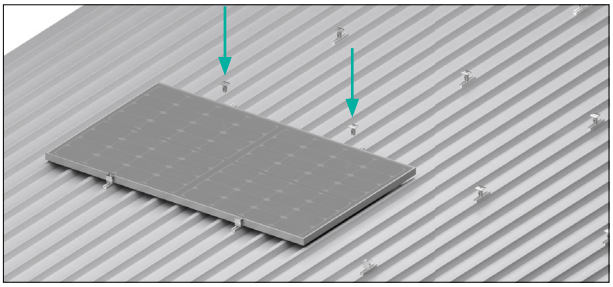

Proper placement of the module clamp:
Centrally, between the thin sheet metal screws!

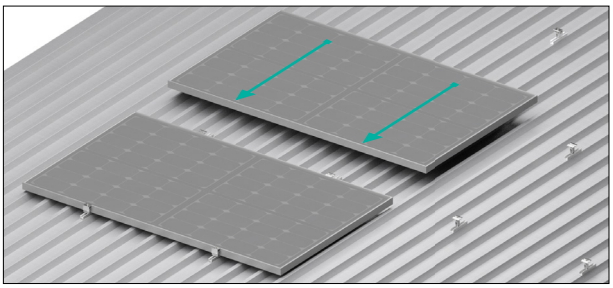

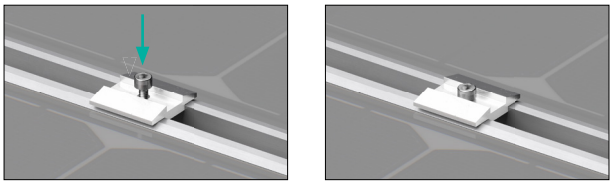

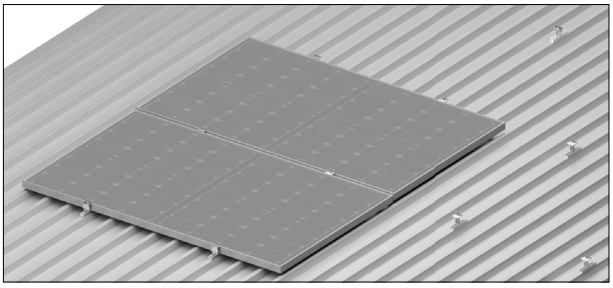

Attention!
Damage to material due to incorrect installation.

Incorrectly fastened modules can fall down and be damaged.

Make sure that the Clickstone locks into place correctly. Push the module all the way to the module end holder. Observe the prescribed tightening torque when tightening the screw. After mounting, check that the module is firmly seated.

Attention!
Damage to material due to incorrect installation.

Overloaded thin sheet metal screws can tear out.

Make sure that the module end holder is positioned correctly. It is essential that the Clickstone is positioned between the two thin sheet metal screws of the rail element.

10.4 Fixing Further Module Rows

Assembly Steps:

- Push the modules of the other columns sideways to the modules of the outer row. For optical reasons, a distance to the lower module can also be maintained.

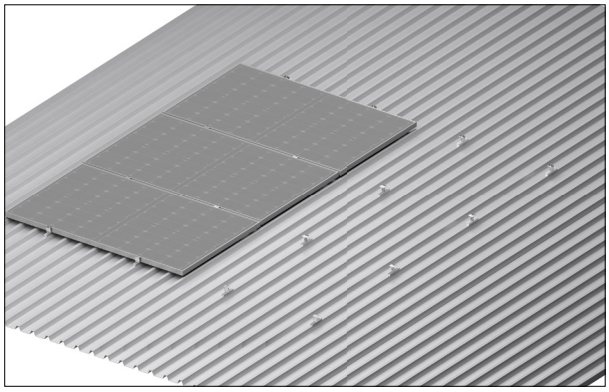

Note!
Use e.g. a module holder as a spacing gauge. This way you get identical distances horizontally and vertically.

- Fasten modules analogously in the first column with module end holders and module holders (see **10.2** and **10.3**).

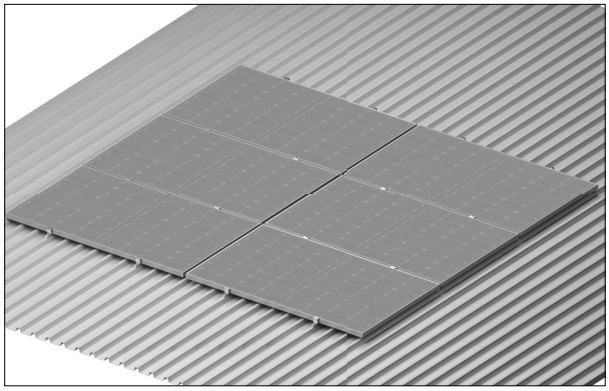

11. Planning the Module Area for a Portrait Module Installation

For portrait installation, short rail sections (GS 5/40 CS; trapezoidal) with a length of 395 mm are installed. The distances are determined by the dimensions of the modules to be installed as well as the vertical bead distance. The clamping points specified by the manufacturer must be observed.

The distance between the profile rails is calculated as follows:

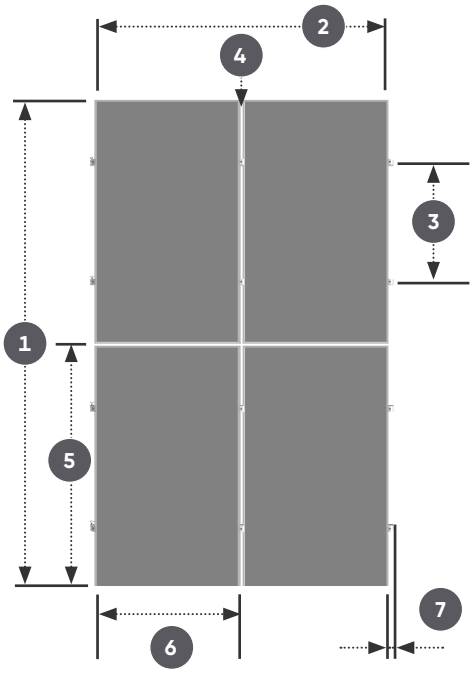

1. Height of the module field:
   nMV x ML + (Total gap dimension, if needed)

2. Width of the module field::
   nMH x (MW + 19 mm) + 2 x 41 mm - 19 mm

   nMV Number of modules vertical
   nMH Number of modules horizontal

3. Distance of the base rail vertically (according to the clamping points defined by the module manufacturer) approx. quarter points of the modules = 1/2 x module length

4. Distance between the modules = 17–19 mm

5. Module length (ML)

6. Module width (MW)

7. 41 mm overlap of the rail for fastening the end clamps

   Design according to local conditions in accordance with Eurocode 1-DIN EN 1991-1-1/ Eurocode 9-DIN EN 1999-1-1 required

12.Mounting Modules in portrait orientation

The modules are mounted to the rails one by one. Mounting Systems GmbH recommends mounting the modules starting from one side. Module clamps and module end clamps are used for the fastening of the modules. The module end clamps can hold one module each. The mod

12.1 Fixing the Clickstones

Clickstones are used when mounting the modules. The Clickstone is a special clip with which the module holders are fixed in the profile rail. You only need an Allen key (5 mm) for mounting. You can insert the Clickstone from above into the rail channel of the profile rail.

Mounting Steps:

- Insert the Clickstone at a slight angle into the rail channel.
- Press the Clickstone down. Make sure that you hear it click into place in the base rail.
- Tighten the hexagon socket screw to 8 Nm.

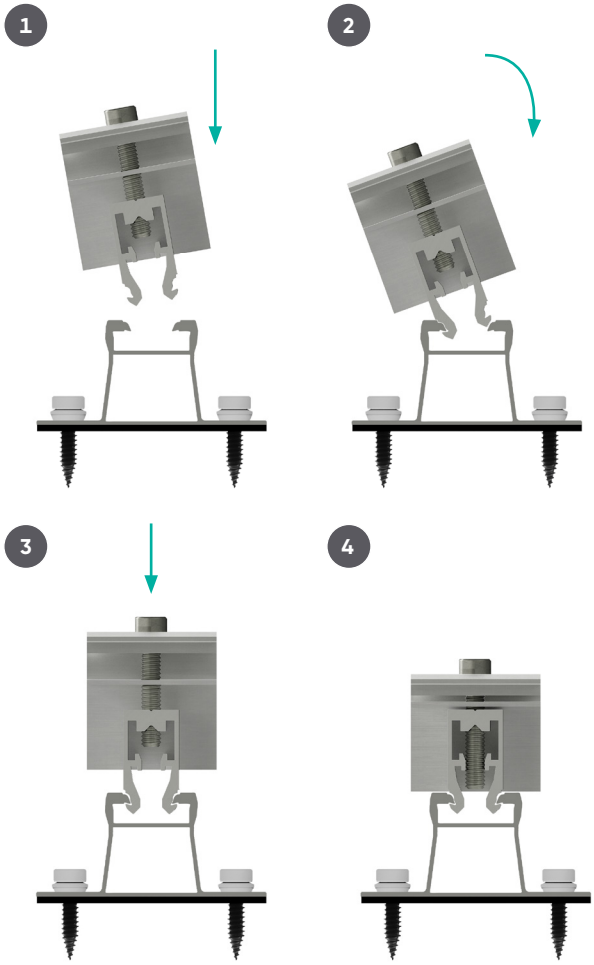

Note!
The Clickstone shape corresponds exactly to the rail channel profile. The Clickstones are constructed so that it is not easy to move them sideways, so they don't slide away. In order to shift the Clickstone, press the screw down lightly and slide the component in the rail channel, pressing on it gently.

Note!
The noses on the internal sides of the Clickstones are constructed so that it is impossible for them to become dislocated when the screw is tightened. Accordingly, the screw may be loosened slightly so that it protrudes above the nose level; only then remove the Clickstone from the base rail by compressing it slightly and raising it.

Attention!
Damage to material due to incorrect installation.

Incorrectly installed Clickstones may be ripped out. The modules may fall and become damaged.

Install all Clickstone connections as foreseen by the manual

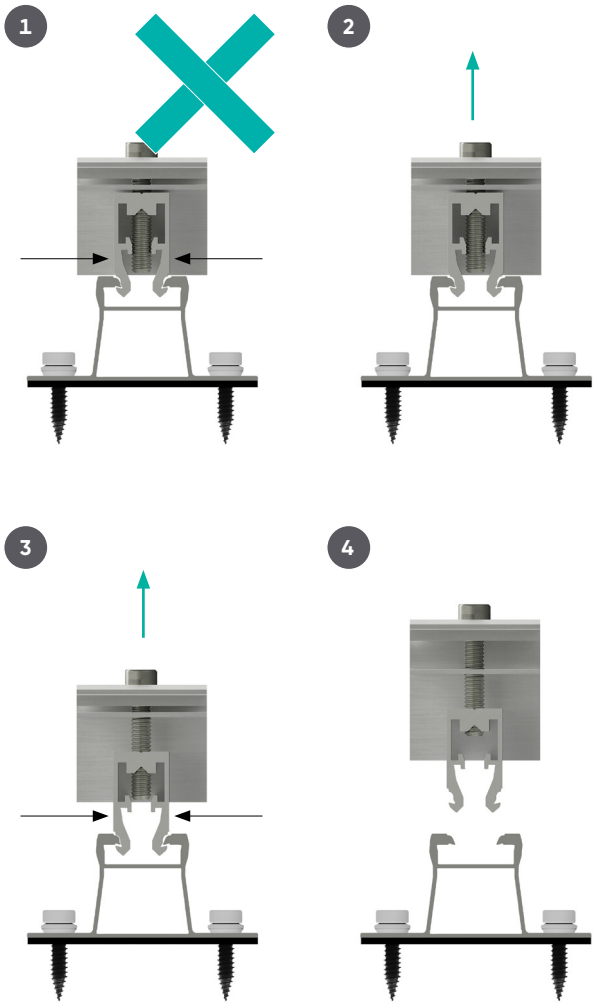

Attention!
Material damage due to damage to Clickstones.

When using significantly deformed Clickstones, proper and safe installation of modules cannot be guaranteed. Modules are at risk of falling and becoming damaged.

Only use Clickstones, the noses of which are parallel to each other, and which click audibly when locking in place

Replace deformed Clickstones before assembly

12.2 Fixing the Modules From the Outside

Edge modules in a PV arrangement (and for a vertical installation – the outermost left and right module column) are fixed from the outside using two edge clamps per module.

Mounting Steps:

- Apply an external module and position it correctly. Leave 41 mm of free rail length protruding towards the outside of the field.
- Insert the Clickstone for the end clamp into the rail channel.
- Slide the module end clamp all the way to the frame.
- Tighten the screw (torque: 8 Nm), the module is clamped.

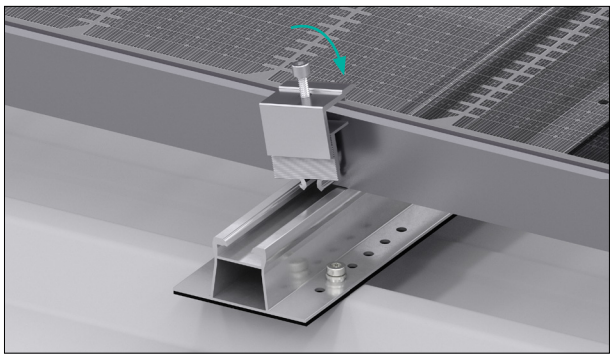

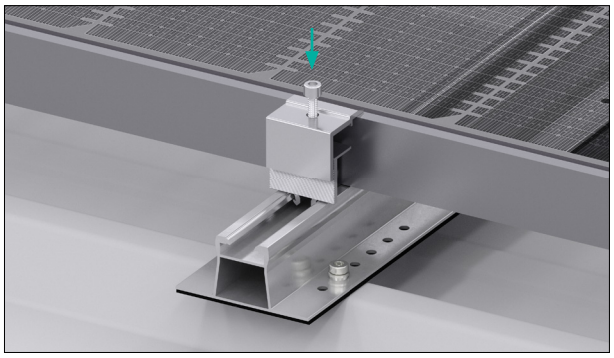

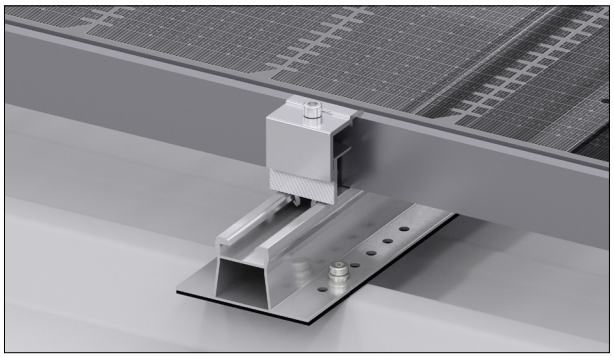

Attention!
Material damage due to incorrect installation.

Modules fixed the wrong way may fall and become damaged.

Make sure the Clickstones are fixed properly. Slide the module all the way to the end clamp.
When tightening screws, adhere to the indicated torque values. After installation make sure that the module is fixed well.

12.3 Fixing the Modules From the Inside

Always fix two module clamps between modules

Mounting Steps:

- Embed the Clickstone of the end clamp in the profile rail channel.
- Slide the module clamp all the way to the frame of the module already installed.
- Slide the second module to the module clamp; lay out properly.
- Tighten the screw (torque: 8 Nm),so the module is properly fixed.

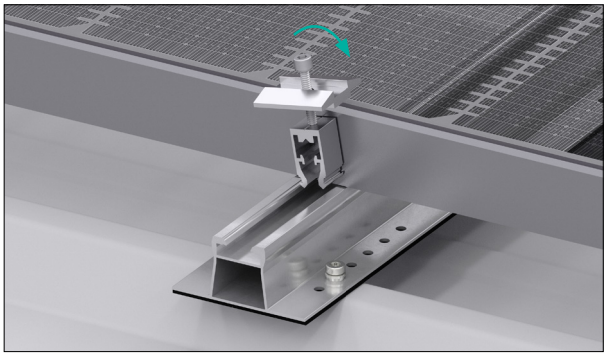

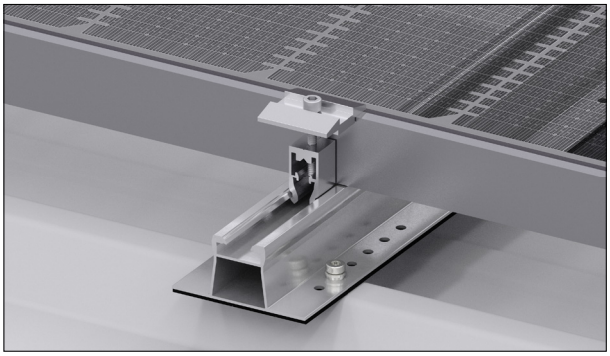

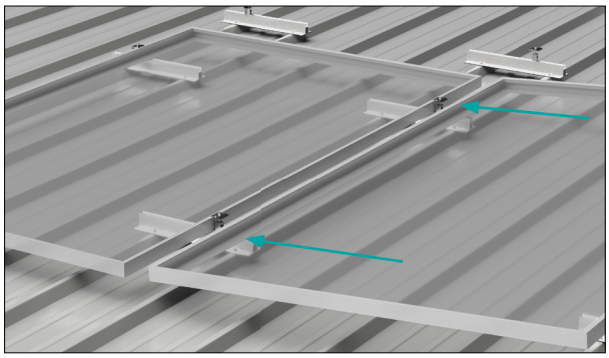

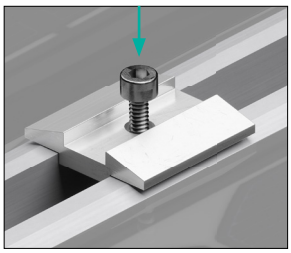

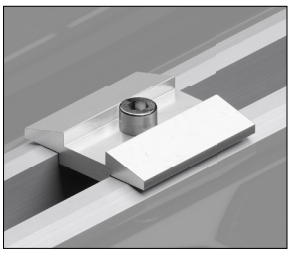

Attention!
Material damage due to incorrect installation

Modules installed the wrong way may fall and become damaged.

Make sure the Clickstones are fixed properly. Slide the module all the way to the end clamp. When tightening screws, adhere to the indicated torque values. After installation make sure that the module is fixed well.

12.4 Fixing Further Modules

Mounting Steps:

- Modules of higher rows should be slid from the top to the modules of the lower rows. For optical reasons, if necessary, one may retain a specific spacing from the lower module.

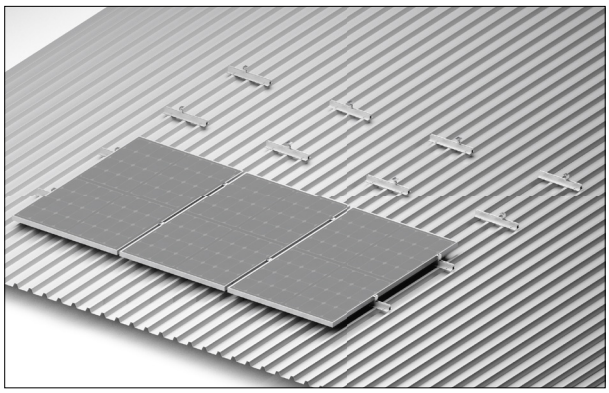

- Fix the modules analogously to the first row using clamps and end clamps (see 12.2 and 12.3).

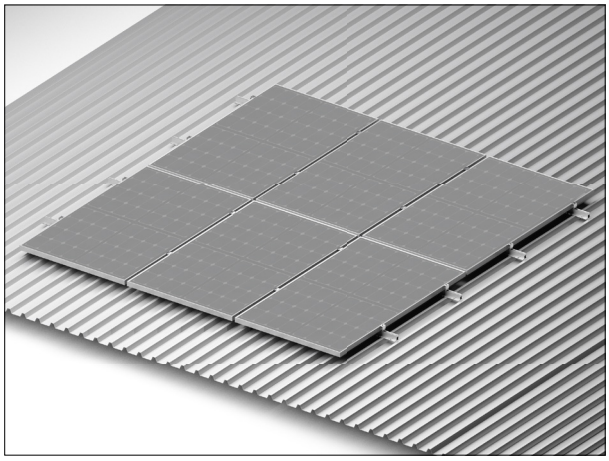

Note!
Use e.g. the module clamp as a distance indicator. In this way, one can achieve the same vertical and horizontal distances between modules.

mounting
systems